FLARE FIREPLACES

Front Facing – Wood Framing - Regular

Rev. 5

Fireplace Dimensions

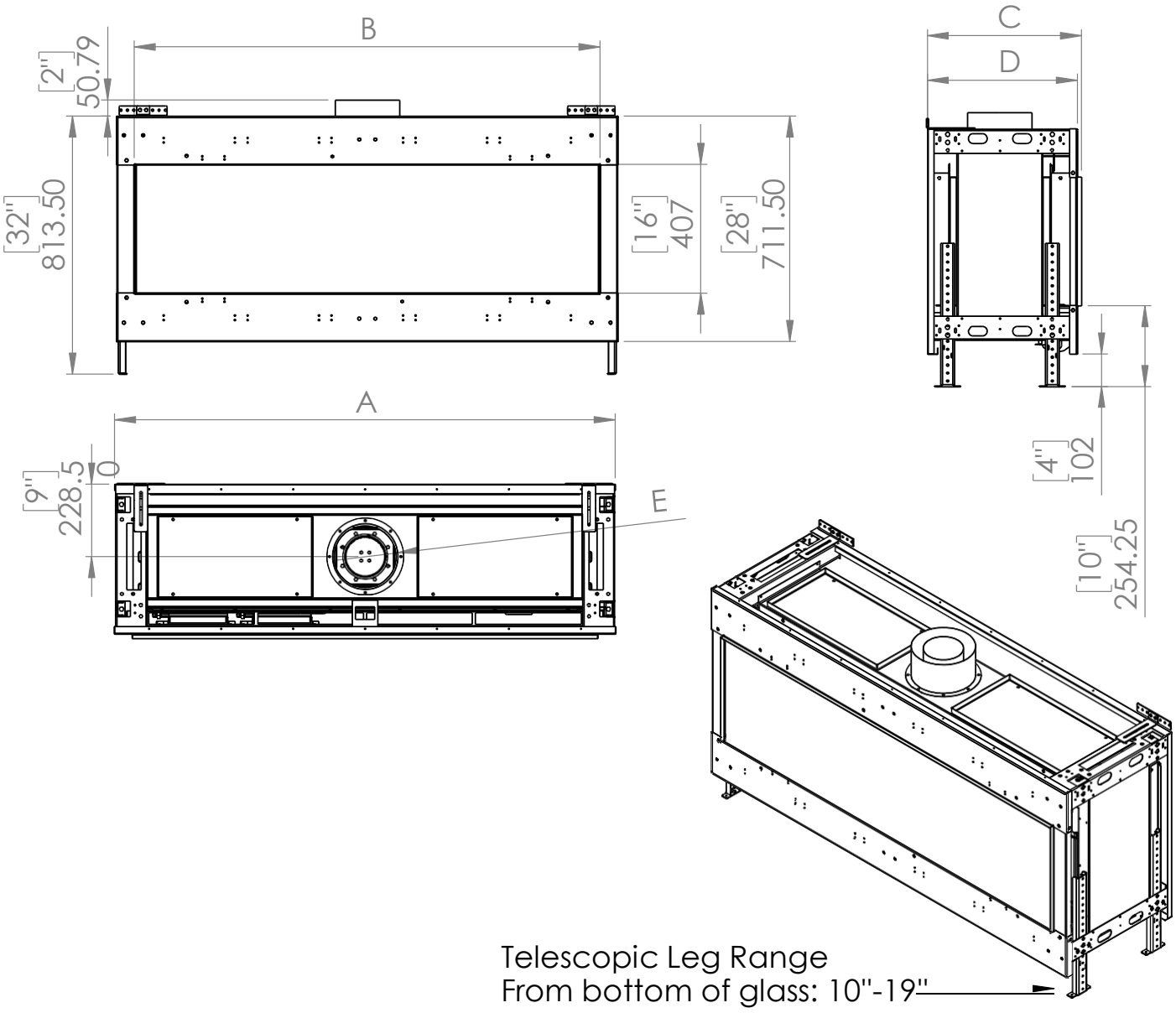

Model		45	50	60	70	80	100
A	IN	45 9/16	52 5/16	62 2/16	72 3/16	84 9/16	101 8/16
	MM	1157	1328	1577	1833	2147	2578
B	IN	41 4/16	47 15/16	57 13/16	67 10 /16	80 4/16	97 3/16
	MM	1047	1217	1468	1717	2038	2468
C	IN	18 9/16	18 9/16	18 9/16	18 9/16	18 9/16	18 9/16
	MM	471	471	471	471	471	471
D	IN	18 1/16	18 1/16	18 1/16	18 1/16	18 1/16	18 1/16
	MM	458	458	458	458	458	458
E	IN	4x6	5x8	5x8	5x8	5x8	5x8
	MM	101x152	127x203	127x203	127x203	127x203	127x203

FLARE FIREPLACES

Appliance Location

Clearances below are to non-combustible materials.

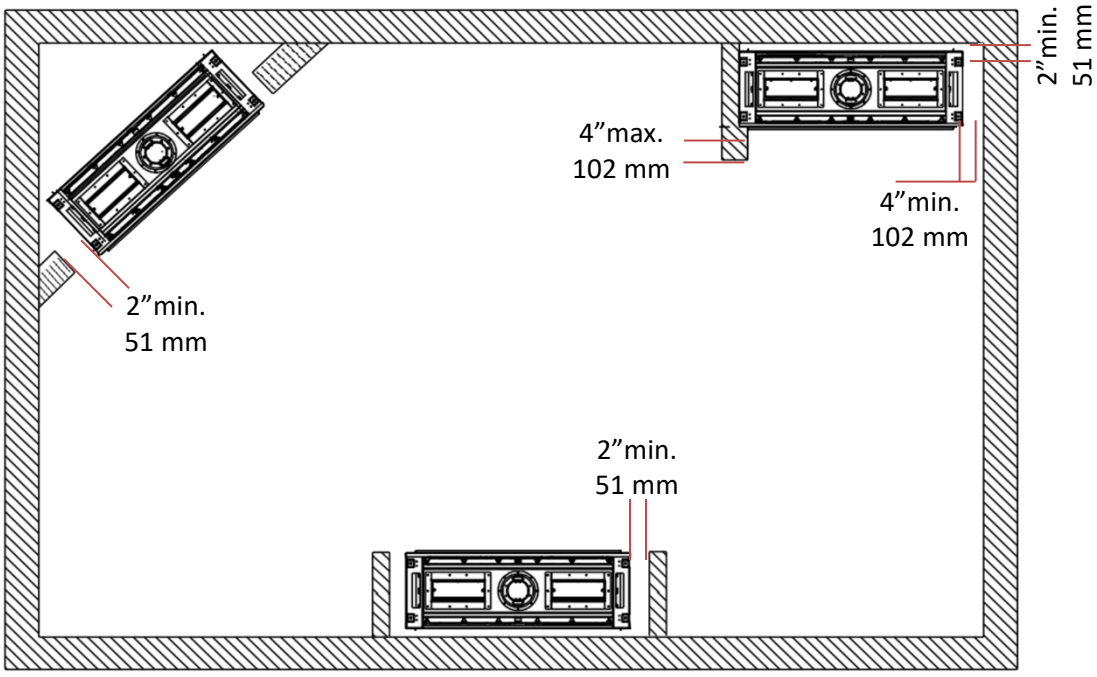

Chimney Installation

Horizontal Termination

For 5x8 vent pipe termination create a 10”x12” opening

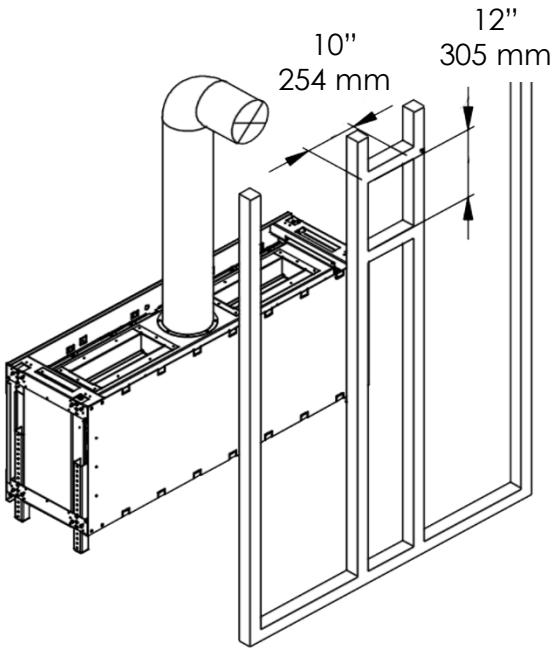

Vertical Termination

For 5x8 vent pipe termination create a 10”x10” opening

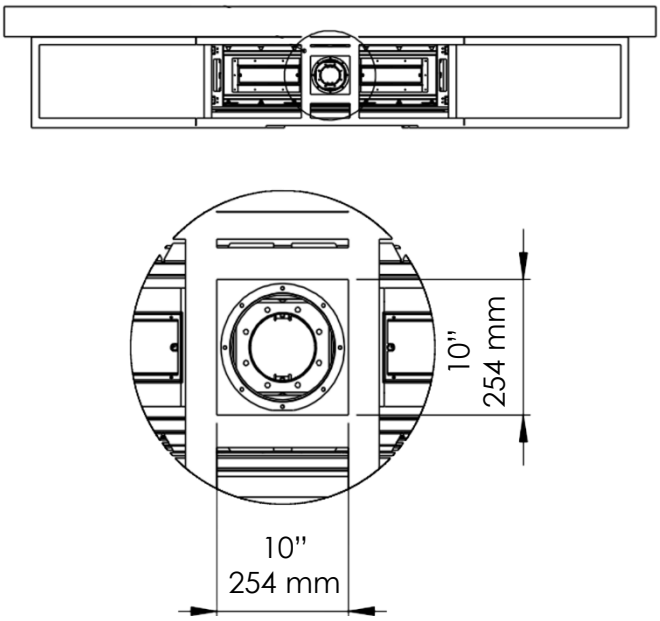

FLARE FIREPLACES

Flat vs Recessed Installation

Flat Installation

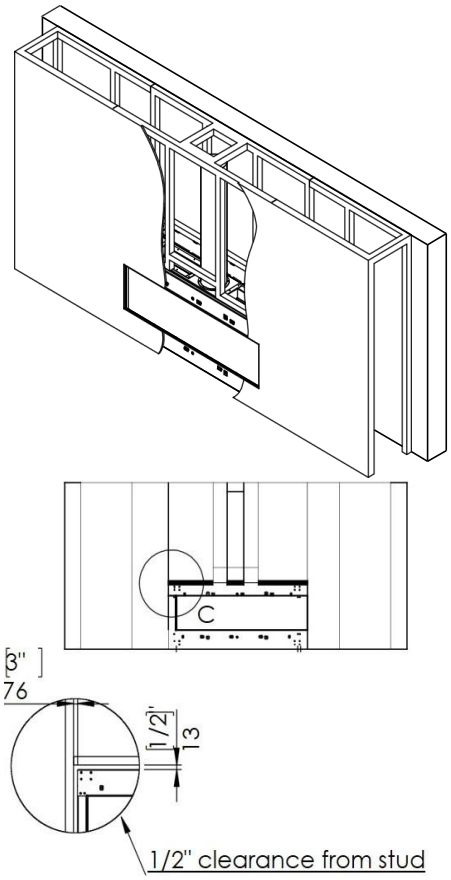

Recessed Installation

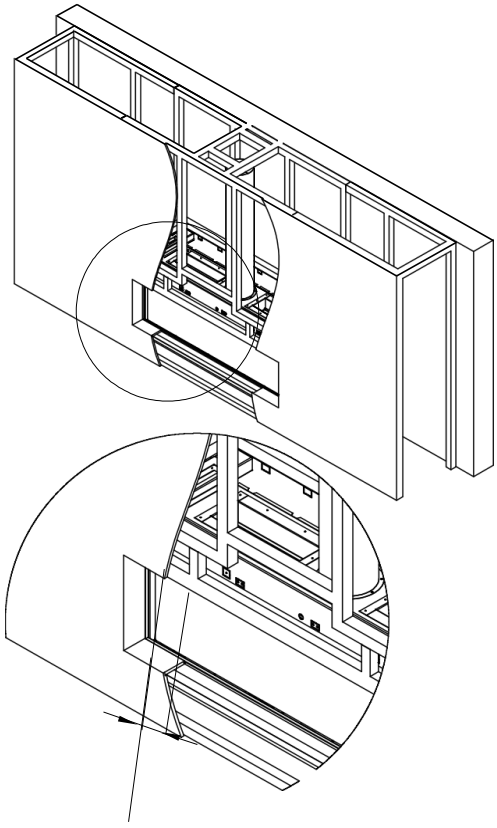

0 - 4" Recommended, 8" Max

Heat Release and Air Intake

Required Heat Release Open Air-Flow Minimum

80” and 100” Fireplaces - 200 square inches minimum.

60” and 70” Fireplaces - 140 square inches minimum.

30”, 45”, 50” Fireplaces - 100 square inches minimum.

Required Air Intake Open Air-Flow Minimum

80” and 100” Fireplaces - 100 square inches minimum.

60” and 70” Fireplaces - 70 square inches minimum.

30”, 45”, 50” Fireplaces - 50 square inches minimum.

*(*Blower Kit and Cool Glass)*

*(**See Through and Room Definer Requirements Double.)*

*(***Openings are measured for open air-flow)*

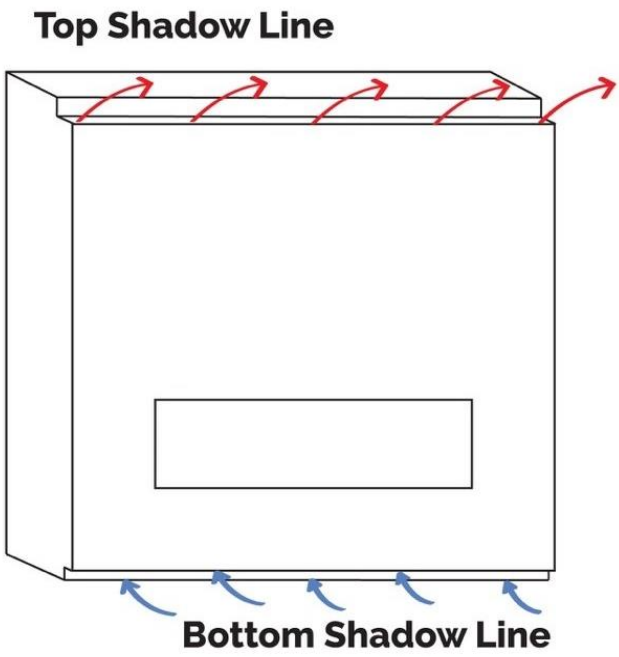

FLARE FIREPLACES

Stud-To-Stud Wood Framing

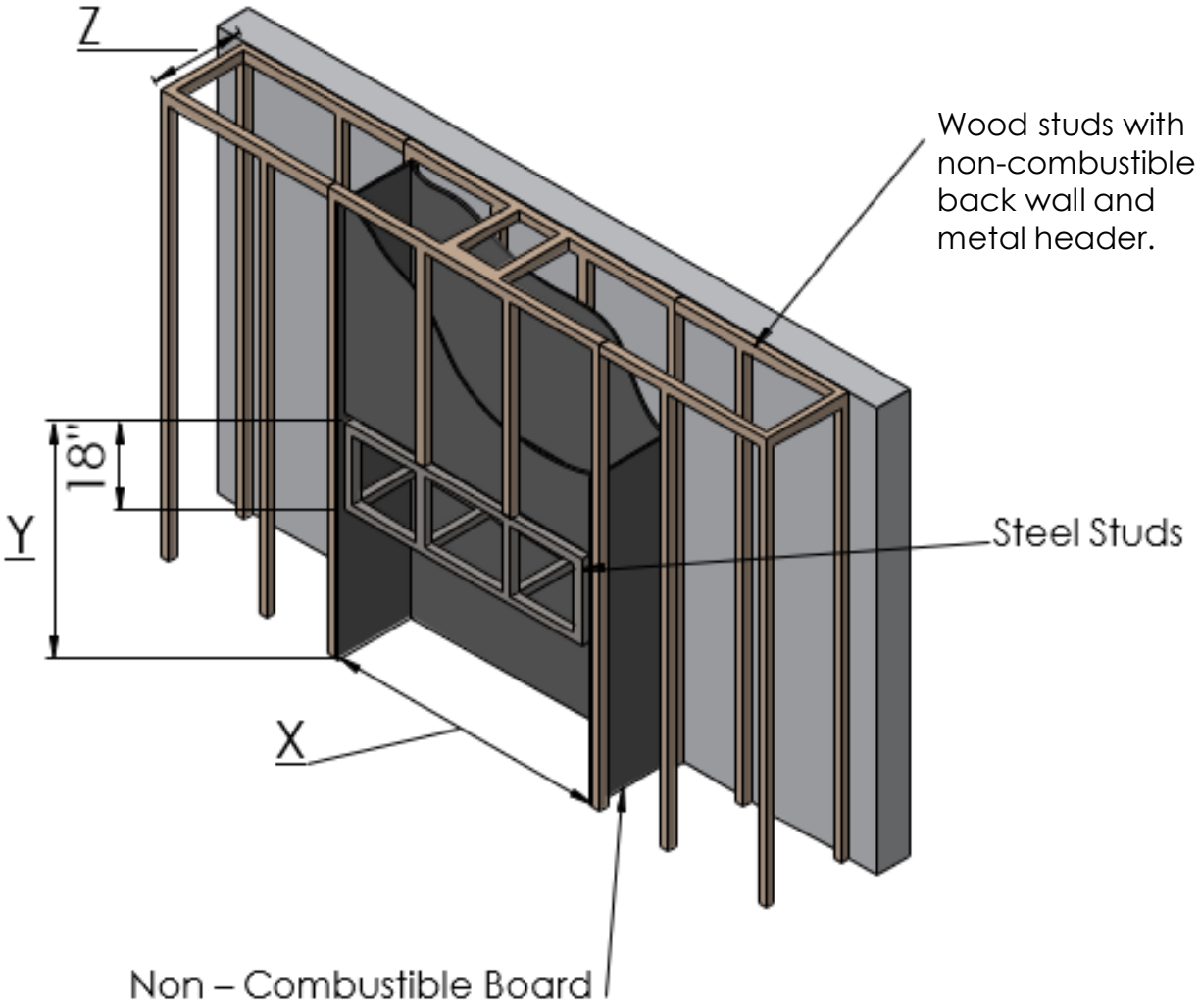

NOTE: Dimension "Y" assumes the fireplace legs are set to the default height of 4", placing the glass opening at 10" above the floor. **This "Y" dimension can change based on where your client wants their viewing window**.

*All framing and finishing must be secured to your projects back wall, ceiling or floor and must never bear weight on the fireplace in any circumstance. For more information reference the Installation Manual.

Model		X	Y	Z	
				Flat Installation	Recess Installation (4")
45	IN	51 9/16	50 8/16	21 1/16	25 1/16
	MM	1294	1282	534	636
50	IN	58 5/16	50 8/16	21 1/16	25 1/16
	MM	1481	1282	534	636
60	IN	68 2/16	50 8/16	21 1/16	25 1/16
	MM	1730	1282	534	636
70	IN	78 3/16	50 8/16	21 1/16	25 1/16
	MM	1985	1282	534	636
80	IN	90 9/16	50 8/16	21 1/16	25 1/16
	MM	2300	1282	534	636
100	IN	107 8/16	50 8/16	21 1/16	25 1/16
	MM	2731	1282	534	636

FLARE FIREPLACES

Materials and Clearances

HEAT RELEASE
*REQUIRED ON EVERY INSTALL

1ST METAL STUD FLAT-FACED TO ALLOW AIRFLOW

12" CLEARANCE FROM BASE OF TV TO TOP OF GLASS OPENING.

1" MINIMUM FROM PIPE TO NON-COMBUSTIBLE BACK WALL

3" MINIMUM TO COVERED WOOD FRAMING

2" MINIMUM TO NON-COMBUSTIBLE BACK WALL

AIR INTAKE
*COOL GLASS OR BLOWER KIT ONLY

COMBUSTIBLE MATERIAL

NON-COMBUSTIBLE MATERIAL

18" NON-COMBUSTIBLE METAL FRAMING ONLY ZONE

Wood Framing Clearances and Materials Example

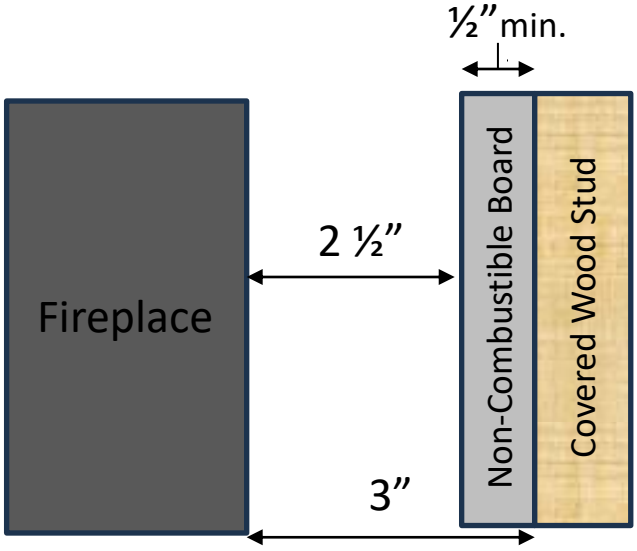

*Any combustible material found within the fireplace cavity must be covered with a minimum ½" thick non-combustible board and maintain a 3" clearance to the sides and back of the fireplace.