FRONT FACING - PARTS LIST

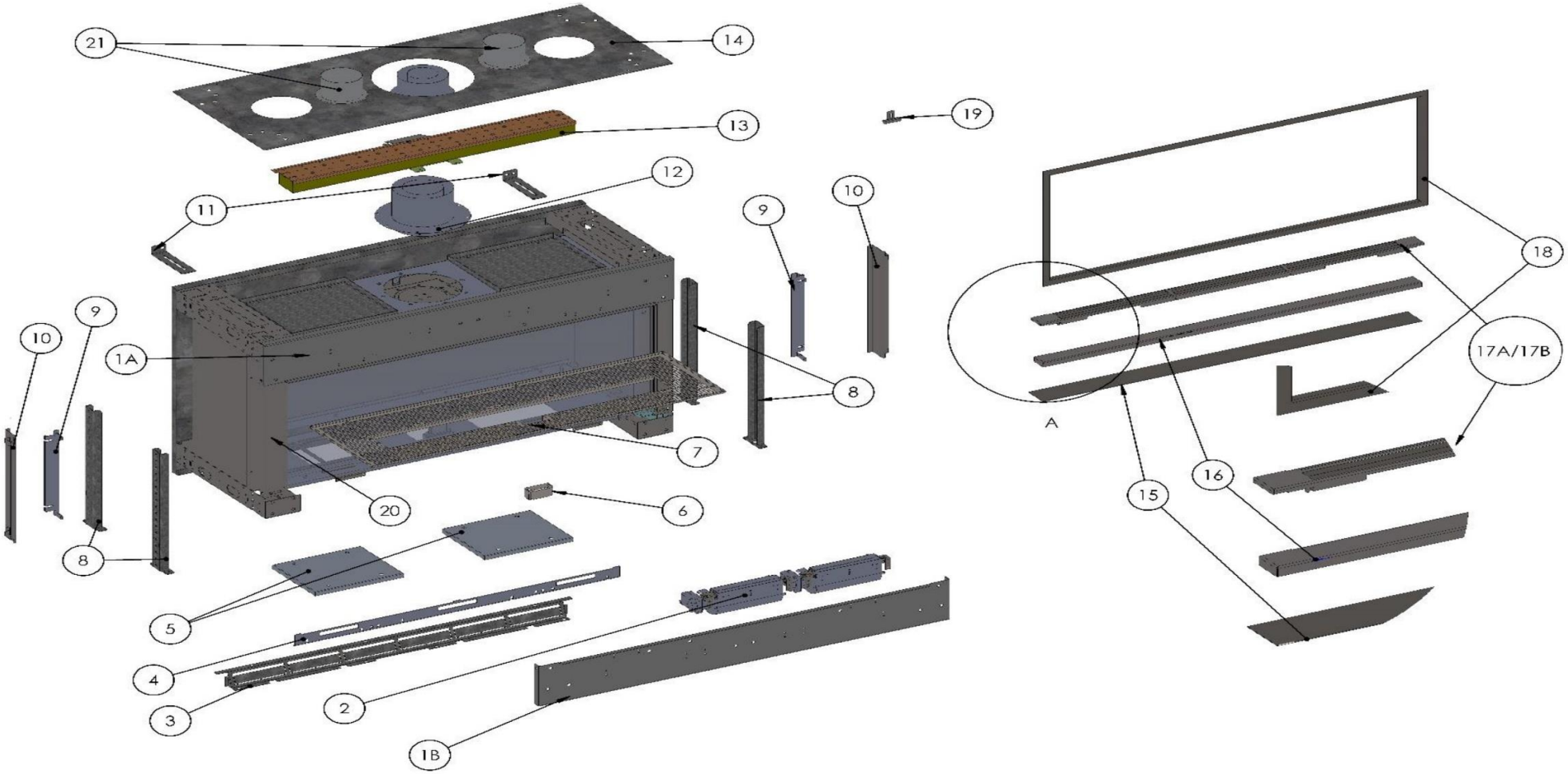

ITEM	PART NUMBER	DESCRIPTION
1A	TXXX-05-11	Upper Front Frame
1B	TXXX-05-11-(DG/SS/BK)	Lower Front Frame *(XXX is fireplace size, and DG/SS/BK is fireplace safety barrier)*
2	Fan - Double Glass	8" Double Glass Fan
3	TXXX-04-11	LED Holder with LEDs
	TXXX-04-11-W	LED Holder without LEDs
4	RDXXX-01-11	Lower Horizontal Rail
5	TXXX-07	Pressure Cap Down
	TXXX-08	Pressure Cap Up In
	TXXX-09	Pressure Cap Up Out
6	G-01-14	Pilot Cover
7	TXXX-06	Burner Tray
8	T-03	Telescopic Legs For Front Facing Fireplaces
9	G-34-(R/H/EH)	Vertical Side Rails
10	T-16-(R/H/EH)	Vertical Filler *(R/H/EH is glass height)*
11	G-02	Stabilizer Brackets
12	3x5 Vent Adapter	Vent Adapter for Power Vented Fireplaces
	4x6 Vent Adapter	Vent Adapter for 30" and 45" Fireplaces
	5x8 Vent Adapter	Vent Adapter for Room Definer and 50" - 100" Fireplaces
13	Burner-XXX	30", 45", 50", 60", 70", 80", 100"
14	TXXX-12-11	Summer Kit Cover
15	TXXX-Filler 73	~~Screen Removal Filler~~ (***Discontinued***)
16	CXXX-10-11-S	Horizontal Filler for Screen Fireplaces
17A	CXXX-10-11	Horizontal Filler for Double Glass Fireplaces
17B	CXXX-10-11-BK	Horizontal Filler for Blower Kit Fireplaces
18	T-XXX-Trim Glass-(R/H/EH)	~~Non Combustible Opening Frame~~ (Discontinued)
19	G-22	Reflective Back Holders
20	T-08-11-(R/H/EH)	Left and Right Vertical Frame
21	4" Collar	4" Summer Kit Adapters

(XXX is fireplace size, DG/SS/BK is fireplace safety barrier, and R/H/EH is glass height)