Rev 05

FLARE Right Corner 80EH

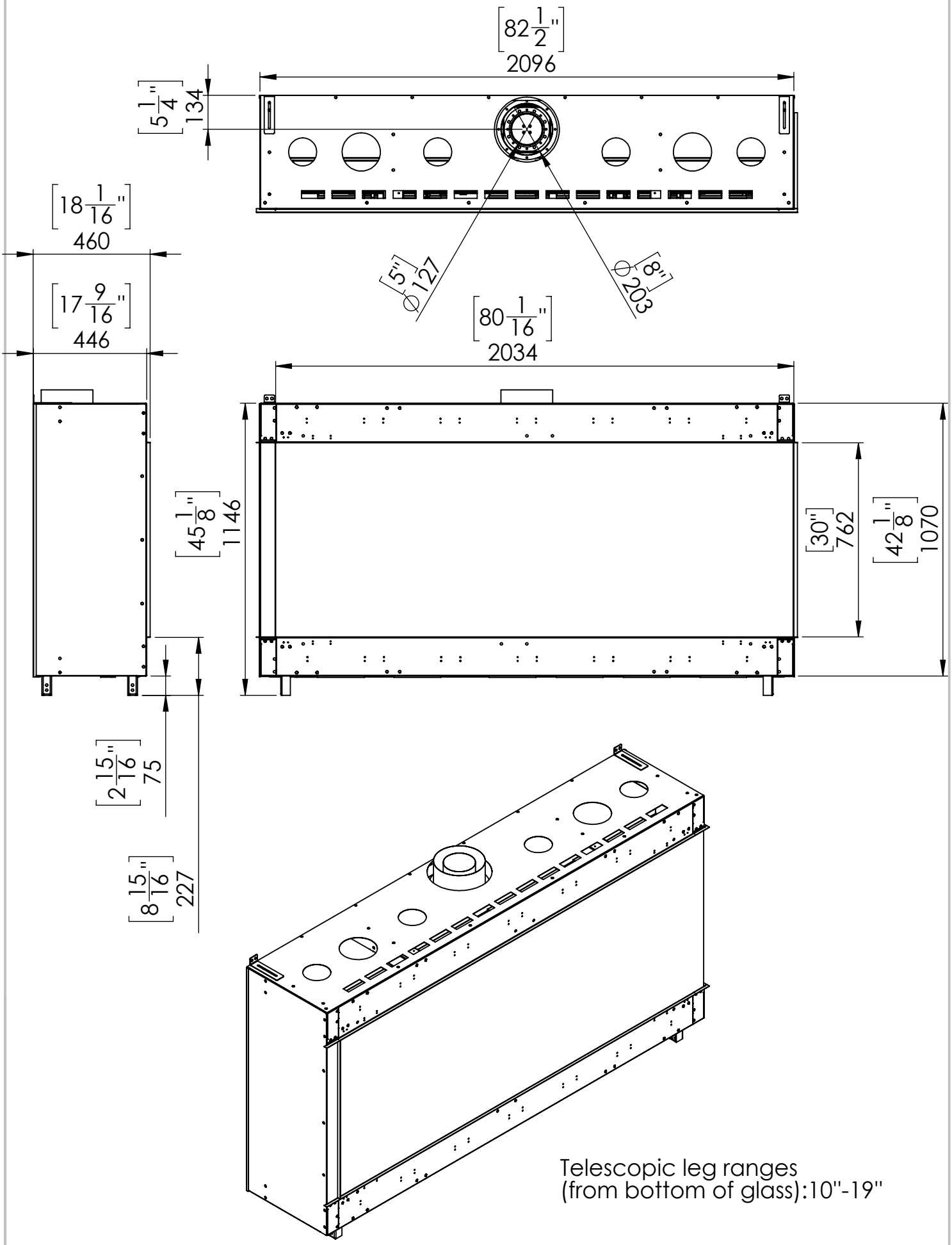

Telescopic leg ranges
(from bottom of glass):10"-19"