FLARE FIREPLACES

Rev. 5

Room Definer – Wood Framing - High

Fireplace Dimensions

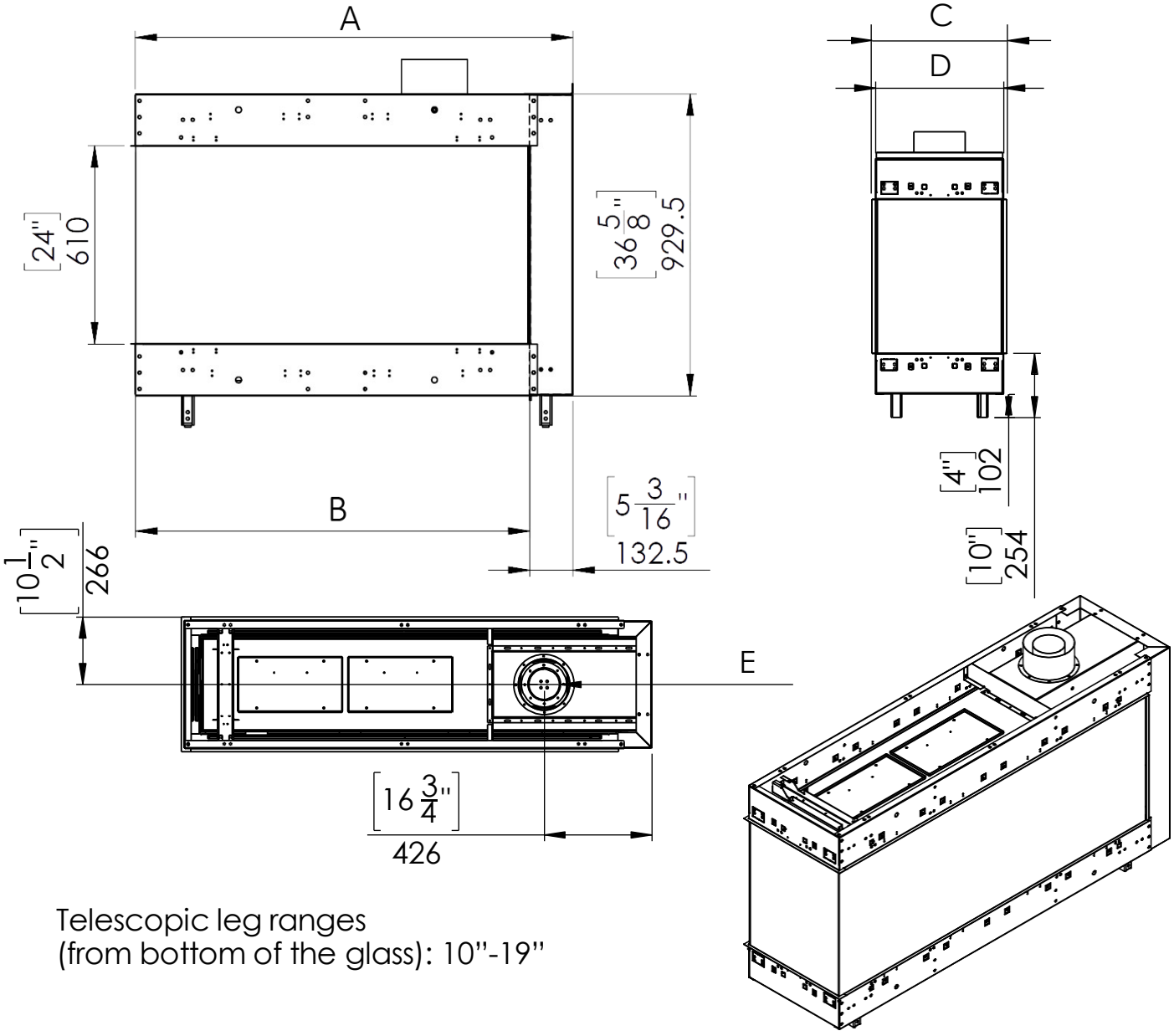

Telescopic leg ranges
(from bottom of the glass): 10"-19"

Model		45	50	60	70	80	100
A	IN	46 5/16	53	62 13/16	72 11/16	85 4/16	102 3/16
	MM	1176	1346	1596	1846	2166	2596
B	IN	41	47 11/16	57 9/16	67 6/16	80	96 15/16
	MM	1041	1211	1462	1711	2032	2462
C	IN	20 15/16	20 15/16	20 15/16	20 15/16	20 15/16	20 15/16
	MM	531	531	531	531	531	531
D	IN	19 15/16	19 15/16	19 15/16	19 15/16	19 15/16	19 15/16
	MM	506	506	506	506	506	506
E	IN	5x8	5x8	5x8	5x8	5x8	5x8
	MM	127x203	127x203	127x203	127x203	127x203	127x203

FLARE FIREPLACES

Appliance Location

Clearances below are to non-combustible materials.

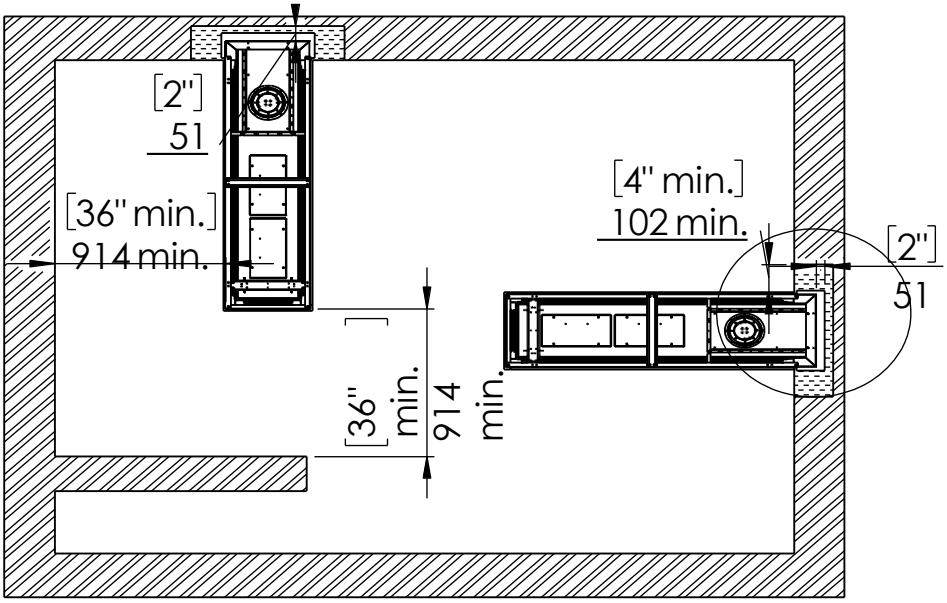

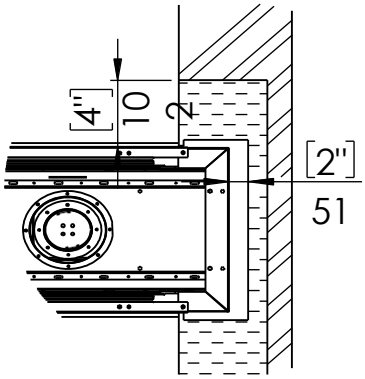

Combustible Materials
Non-Combustible Materials

Chimney Installation

Horizontal Termination

For 5x8 vent pipe termination create a 10"x12" opening

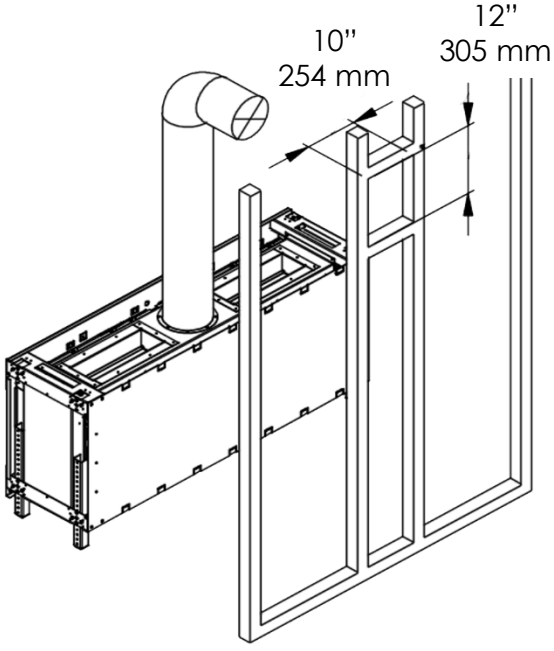

Vertical Termination

For 5x8 vent pipe termination create a 10"x10" opening

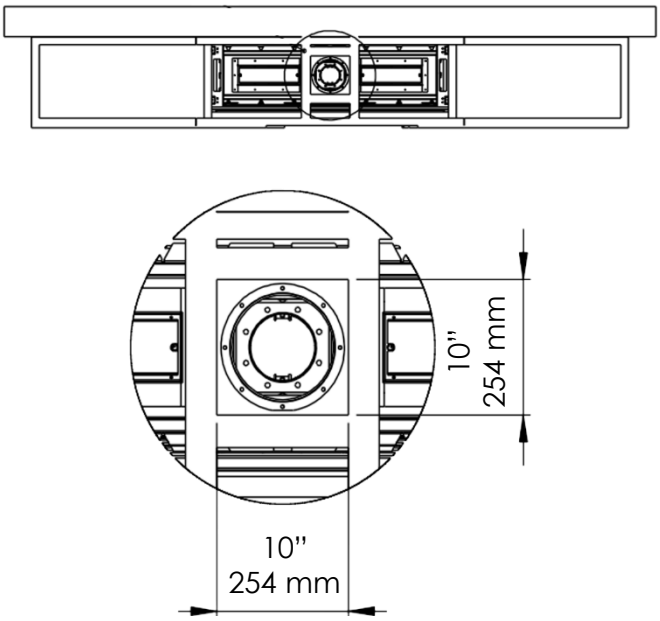

FLARE FIREPLACES

Flat vs Recessed Installation

Flat Installation

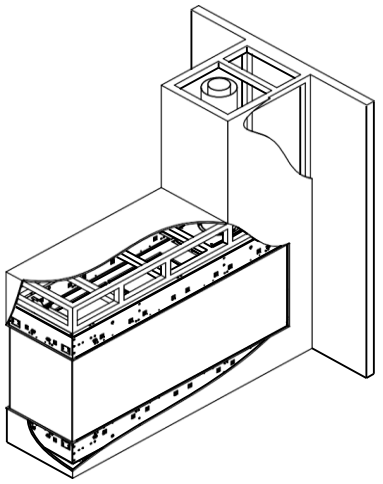

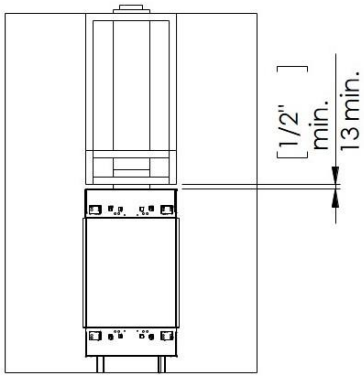

Recessed Installation

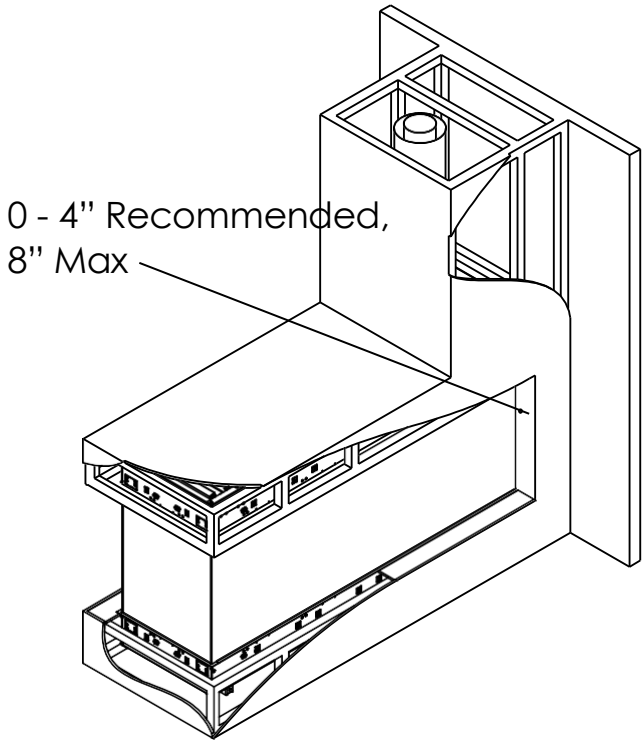

Heat Release and Air Intake

Required Heat Release Open Air-Flow Minimum

80” and 100” Fireplaces - 200 square inches minimum.

60” and 70” Fireplaces - 140 square inches minimum.

30”, 45”, 50” Fireplaces - 100 square inches minimum.

Required Air Intake Open Air-Flow Minimum

80” and 100” Fireplaces - 100 square inches minimum.

60” and 70” Fireplaces - 70 square inches minimum.

30”, 45”, 50” Fireplaces - 50 square inches minimum.

*(*Blower Kit and Cool Glass)*

*(**See Through and Room Definer Requirements Double.)*

*(***Openings are measured for open air-flow)*

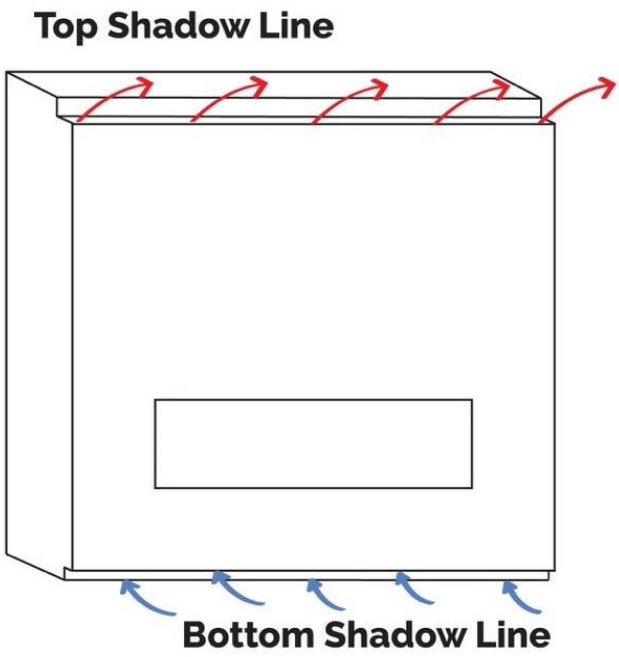

FLARE FIREPLACES

Stud-To-Stud Wood Framing

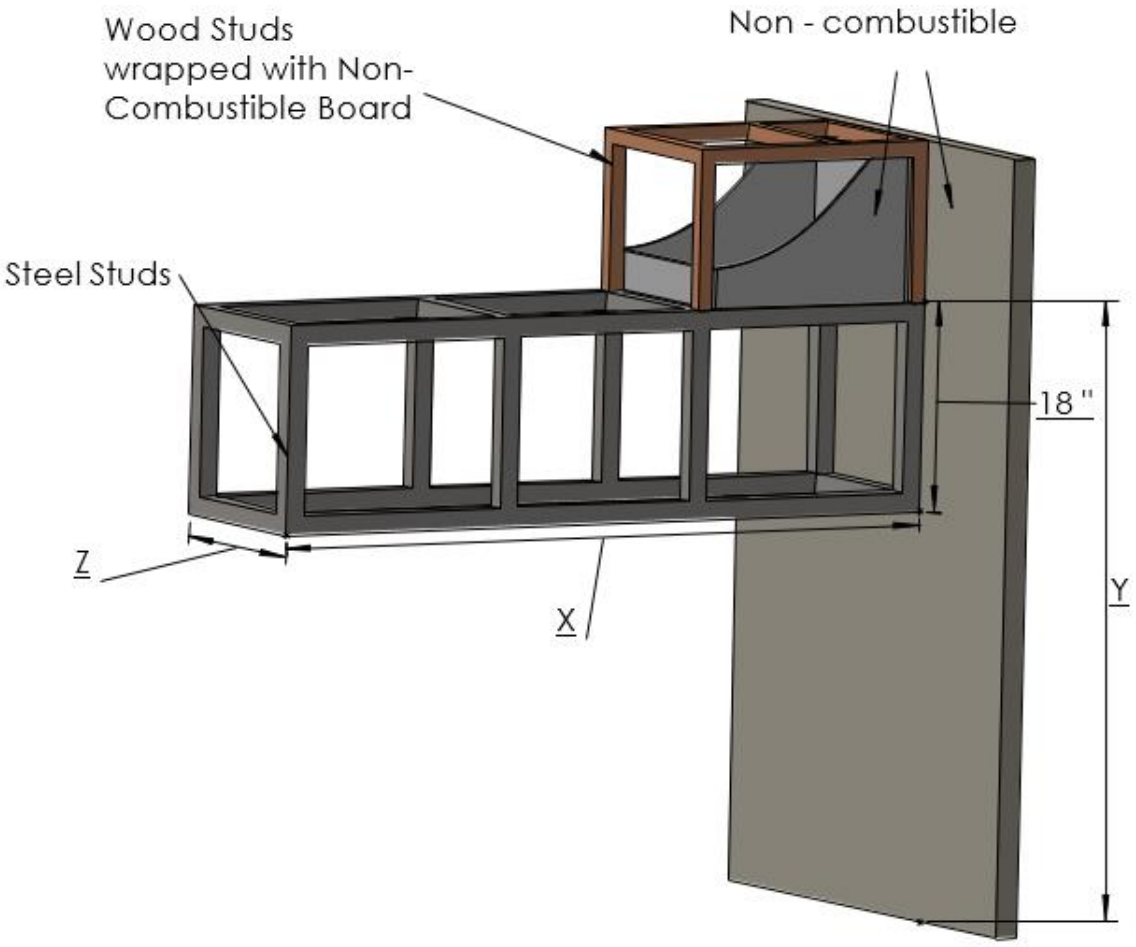

NOTE: Dimension "Y" assumes the fireplace legs are set to the default height of 4", placing the glass opening at 10" above the floor. **This "Y" dimension can change based on where your client wants their viewing window**.

*All framing and finishing must be secured to your projects back wall, ceiling or floor and must never bear weight on the fireplace in any circumstance. For more information reference the Installation Manual.

Model		X	Y	Z	
				Flat Installation	Recess Installation (4")
45	IN	49 5/16	59 2/16	19 15/16	27 15/16
	MM	1252	1501	506	709
50	IN	56	59 2/16	19 15/16	27 15/16
	MM	1422	1501	506	709
60	IN	65 13/16	59 2/16	19 15/16	27 15/16
	MM	1671	1501	506	709
70	IN	75 11/16	59 2/16	19 15/16	27 15/16
	MM	1922	1501	506	709
80	IN	88 4/16	59 2/16	19 15/16	27 15/16
	MM	2241	1501	506	709
100	IN	105 3/16	59 2/16	19 15/16	27 15/16
	MM	2671	1501	506	709

FLARE FIREPLACES

Materials and Clearances

HEAT RELEASE
*REQUIRED ON EVERY INSTALL

1ST METAL STUD FLAT-FACED TO ALLOW AIRFLOW

12" CLEARANCE FROM BASE OF TV TO TOP OF GLASS OPENING.

1" MINIMUM FROM PIPE TO NON-COMBUSTIBLE BACK WALL

3" MINIMUM TO COVERED WOOD FRAMING

2" MINIMUM TO NON-COMBUSTIBLE BACK WALL

AIR INTAKE
*COOL GLASS OR BLOWER KIT ONLY

COMBUSTIBLE MATERIAL

NON-COMBUSTIBLE MATERIAL

18" NON-COMBUSTIBLE METAL FRAMING ONLY ZONE

Wood Framing Clearances and Materials Example

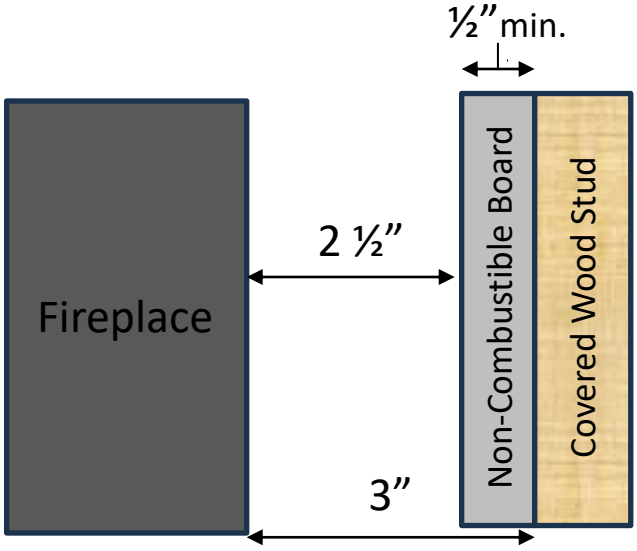

*Any combustible material found within the fireplace cavity must be covered with a minimum ½" thick non-combustible board and maintain a 3" clearance to the sides and back of the fireplace.